Analysing Uranium: Resource Base, Extraction Practices, and Refinement Processes

MSE 304: Principles of Metal Extraction and Refining

Phase-3

Hanumanthagouda Policepatil (23110126)
Raavi Hari Charan Teja (23110260)
Ganivada Lalith (23110112)

Faculty Advisor: Prof. Surya Pratap Mahrotra

Department of Materials Engineering

IIT Gandhinagar

Sep 20, 2025

TABLE OF CONTENTS

1. Introduction: The Strategic Framework of Uranium Extraction in India ...

1.1 The Industrial Cycle: From Ore to Fuel ...

1.2 The "Lean Ore" Challenge ...

1.3 Geological Control on Processing Routes ...

2. Ore Preparation (Comminution) ...

2.1 Crushing Circuits ...

2.2 Wet Grinding: A Radiological Necessity ...

2.3 Classification and Liberation ...

3. Physical Beneficiation (Pre-Concentration) ...

3.1 Radiometric Sorting ...

3.2 Gravity Concentration ...

3.3 Magnetic Separation ...

4. Hydrometallurgical Extraction I: The Acid Leaching Route (Jharkhand) ...

4.1 Leaching Chemistry and Thermodynamics ...

4.2 Process Equipment and Parameters ...

4.3 Solid-Liquid Separation ...

5. Hydrometallurgical Extraction II: The Alkaline Pressure Leaching Route (Andhra Pradesh) ...

5.1 Leaching Chemistry ...

5.2 The Pressure Leaching Circuit (Autoclaves) ...

5.3 Filtration Challenges and Solutions ...

6. Purification and Precipitation: Yellowcake Production ...

6.1 Purification via Ion Exchange (IX) in Acid Circuits ...

6.2 Precipitation of Magnesium Diuranate (MDU) ...

6.3 Sodium Diuranate (SDU) from the Alkaline Circuit ...

7. Refining and Fuel Fabrication: The Nuclear Fuel Complex (NFC) ...

7.1 Dissolution and Solvent Extraction (The PUREX Process) ...

7.2 Conversion to Oxide: The ADU vs. AUC Route ...

7.3 Calcination, Reduction, and Sintering ...

7.4 Fuel Bundle Assembly ...

8. Justification for Process Selection: A Technical & Economic Imperative ...

8.1 Acid Leaching (Jharkhand Region) ...

8.2 Alkaline Pressure Leaching (Andhra Pradesh Region) ...

9. Alternate Processes: Status and Feasibility in India ...

9.1 In-Situ Recovery (ISR) ...

9.2 Heap Leaching ...

10. Recovery of By-Products: The "Zero Waste" Philosophy ...

10.1 The By-Product Recovery Plant (BRP) ...

11. References ...

1. Introduction: The Strategic Framework of Uranium Extraction in India

The extraction and refining of uranium in India are not merely commercial metallurgical operations but are strategic activities governed by the imperative of national energy security. Unlike the global uranium market, which fluctuates based on spot prices, the Indian uranium sector is vertically integrated under the **Department of Atomic Energy (DAE)** to support the nation's indigenous three-stage nuclear power program [1].

1.1 The Industrial Cycle: From Ore to Fuel

The cycle operates through two specialized Public Sector Undertakings (PSUs):

1. **Uranium Corporation of India Limited (UCIL):** Responsible for the "front-end" operations, including mining and milling (hydrometallurgical extraction). UCIL processes raw ore to produce an intermediate concentrate known as "Yellowcake" (typically Magnesium Diuranate or Sodium Diuranate) [2].
2. **Nuclear Fuel Complex (NFC):** Responsible for the "finishing" stages. Located in Hyderabad, the NFC receives yellowcake and purifies it to nuclear-grade Uranium Dioxide (UO_2) pellets for fabrication into fuel bundles for Pressurized Heavy Water Reactors (PHWRs) [3].

1.2 The "Lean Ore" Challenge

A defining characteristic of Indian uranium metallurgy is the processing of "lean" or low-grade ores. While major global deposits (e.g., McArthur River in Canada) boast grades above 15% U_3O_8, Indian deposits typically range between **0.03% and 0.06%** U_3O_8 [4].

- **Implication:** To extract 1 kg of uranium, Indian mills must process over 2,000 kg of rock. This necessitates highly efficient **comminution** and **physical beneficiation** stages to reject barren rock early in the cycle, thereby reducing the hydraulic and chemical load on the leaching circuit [5].

1.3 Geological Control on Processing Routes

The extraction technology employed in India is strictly dictated by the mineralogy of the host rock. Two distinct metallurgical provinces exist:

- **Acid Leaching Province (Jharkhand):** The Singhbhum Shear Zone (Jaduguda, Bhatin, Narwapahar, Turamdih) hosts uranium in **Quartz-Pebble Conglomerates** and **Schists**. These silicate rocks are acid-resistant, making Sulfuric Acid leaching the viable economic route [6].
- **Alkaline Leaching Province (Andhra Pradesh):** The Cuddapah Basin (Tummalapalle) hosts uranium in **Phosphatic Siliceous Dolostone**. As this rock is composed of calcium and magnesium carbonates, acid leaching is chemically impossible (the acid would be consumed by the rock). Thus, an Alkaline Pressure Leaching route using Sodium Carbonate was developed [7].

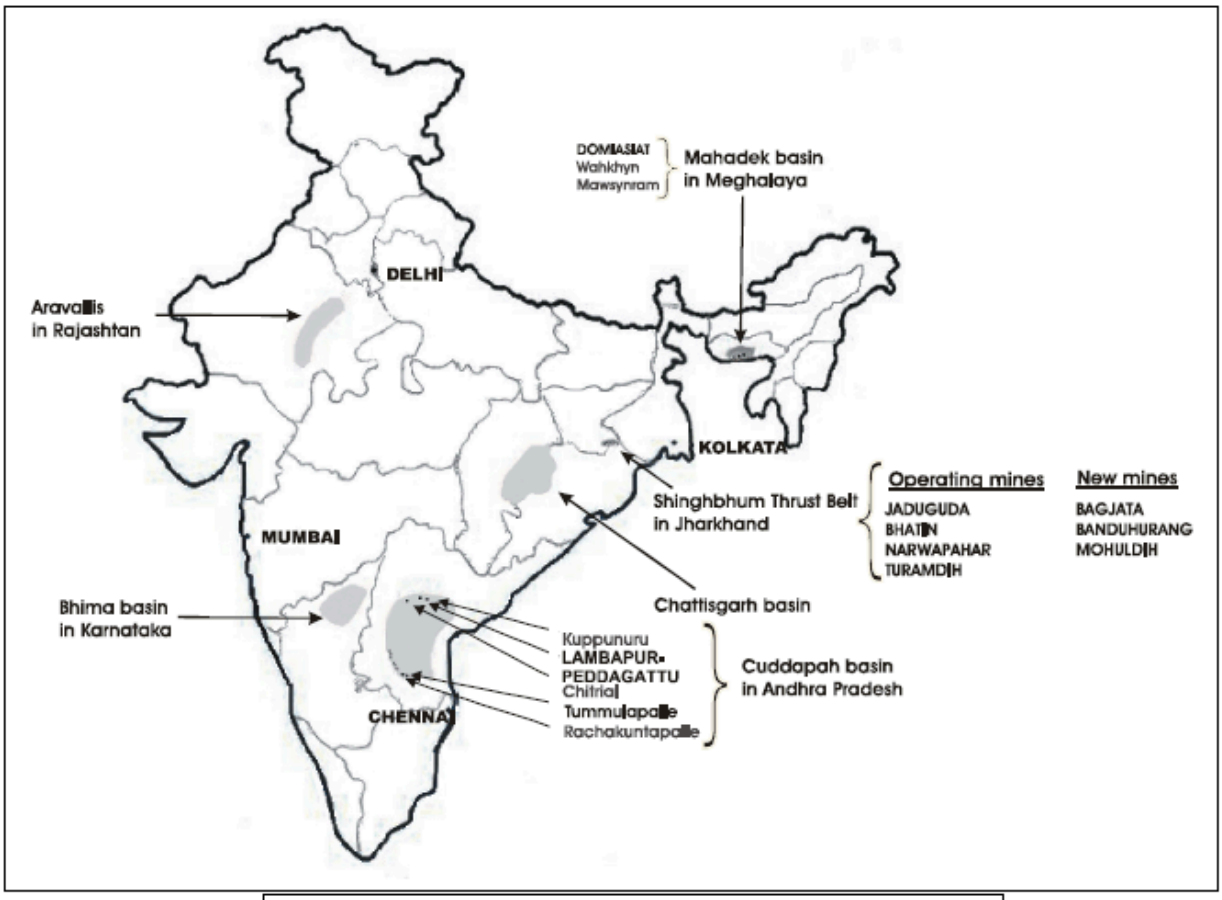

Major uranium provinces of India

Figure 1.1: Geological Map of Uranium Provinces in India. The map distinguishes between the Silicate hosted ores of Jharkhand and Carbonate hosted ores of Andhra Pradesh. > [Citation: Atomic Minerals Directorate (AMD) Exploration Data]

2. Ore Preparation (Comminution)

Before chemical extraction can occur, the Run-of-Mine (ROM) ore must be physically reduced to a size where the uranium minerals are "liberated" (exposed) from the host matrix.

2.1 Crushing Circuits

Mined ore hoisted from underground shafts (e.g., at Jaduguda) arrives as boulders up to 300 mm in size. A multi-stage crushing circuit reduces this to a mill feed size of <25 mm.

- **Primary Crushing:** The ROM ore is fed into a heavy-duty **Double Toggle Jaw Crusher**. This equipment utilizes compressive force to break large rocks down to approximately 100–150 mm. At the Jaduguda mine, the primary crusher is located underground to facilitate skip hoisting [8].
- **Secondary and Tertiary Crushing:** Surface crushing plants employ **Cone Crushers** (Standard and Short-head types). These crushers use an eccentric gyrating spindle to grind the ore against a concave bowl.
- **Screening and Closed Circuit:** The crushing circuit operates in a closed loop with vibrating screens. Ore is screened to separate the fine fraction (acceptable feed) from the coarse fraction. Oversize material (>25 mm) is recirculated to the cone crushers. This ensures a uniform particle size distribution entering the grinding circuit, which is critical for maintaining stable leaching kinetics [9].

2.2 Wet Grinding: A Radiological Necessity

The crushed ore enters the grinding circuit to achieve the final liberation size. In Indian uranium mills, **Wet Grinding** is universally adopted. This choice is driven by health physics mandates rather than simple process efficiency.

- **Radon Control:** Dry grinding of uranium ore releases massive quantities of **Radon-222**, a radioactive gas, and long-lived alpha-emitting dust. Wet grinding, where water is added to form a slurry (pulp), suppresses dust and traps a significant portion of radon within the liquid phase, maintaining occupational exposure limits (DAC) for workers [10].
- **Rod Mills:** The first stage typically employs a Rod Mill, a tumbling mill using steel rods. Rod mills are preferred for the primary grinding stage because they minimize the production of "slimes" (ultra-fine particles <10 microns). Excessive slimes can cause severe clogging in the downstream filtration (solid-liquid separation) stages [11].
- **Ball Mills:** The discharge from the rod mill flows to a Ball Mill, which uses hardened steel balls to grind the ore to the final target size.

2.3 Classification and Liberation

The ball mill operates in a closed circuit with **Hydrocyclones**.

- **Mechanism:** The slurry is pumped tangentially into the cyclone. Centrifugal force separates particles by mass.
    - **Overflow (Fines):** The lighter, finer particles exit the top.
    - **Underflow (Coarse):** The heavier, coarser particles exit the bottom and return to the ball mill for regrinding [12].
- **Liberation Targets:**
    - *Jaduguda (Acid Leach):* Target grind is **55-60% passing 200 mesh (74 microns)**. This relatively coarse grind is sufficient because the uranium minerals are interstitial.
    - *Tummalapalle (Alkaline Leach):* Target grind is finer, approximately **80% passing 200 mesh**. The carbonate ore requires finer grinding to ensure the alkaline lixiviant can penetrate the rock matrix [13].

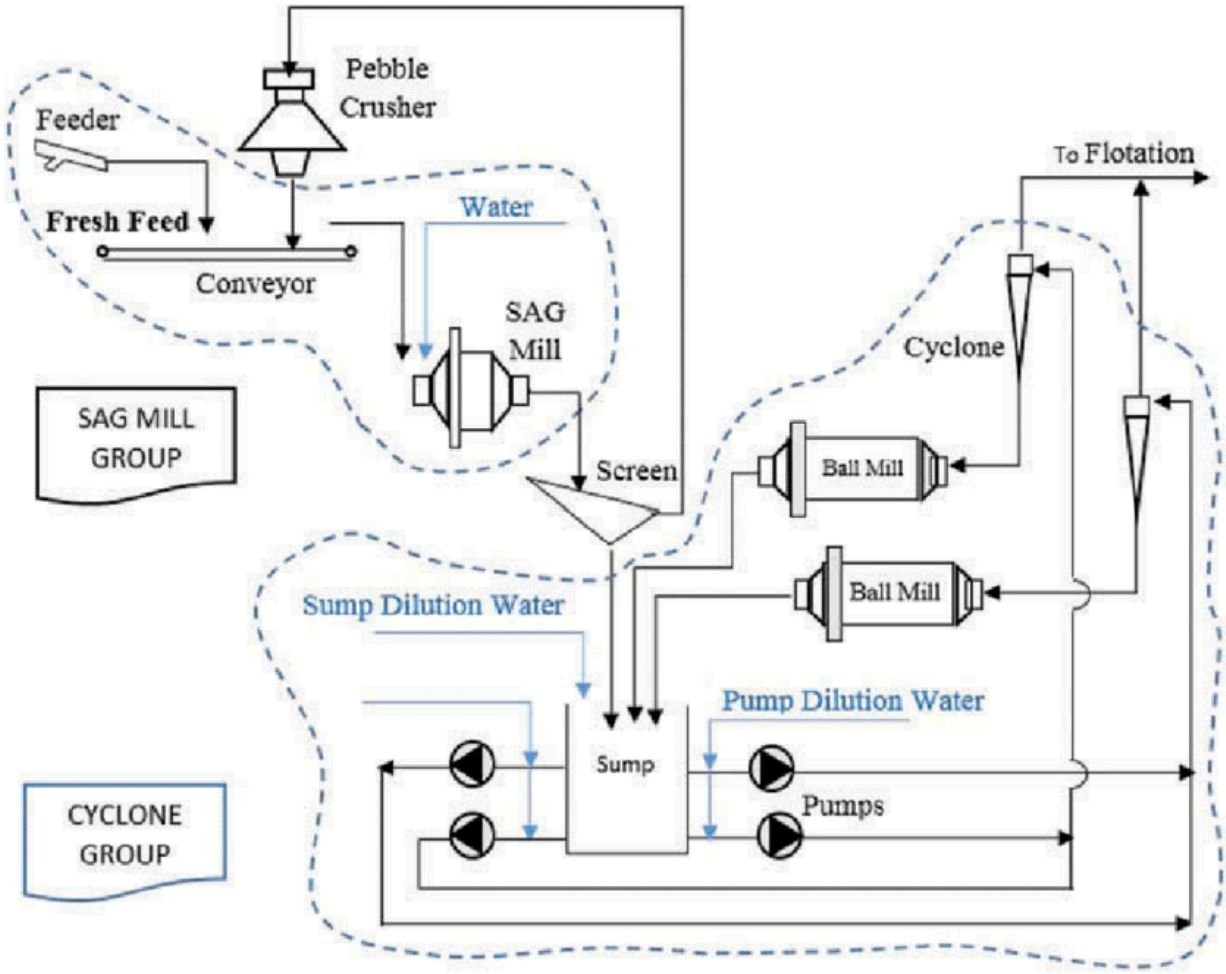

Figure 2.1: Schematic of a Closed-Circuit Wet Grinding System. Note the recycling of hydrocyclone underflow back to the ball mill. > [Citation: Sahoo, S.K. et al., ResearchGate Publication 51426781]

3. Physical Beneficiation (Pre-Concentration)

Given the low grade of Indian ores (~0.05% U_3O_8), processing the entire rock mass via chemical leaching is energy-intensive. **Beneficiation** is the process of upgrading the ore by removing barren gangue (waste rock) based on physical properties before it enters the chemical plant.

3.1 Radiometric Sorting

This technique is applied to the coarse ore fraction (+25 mm) and relies on the natural radioactivity of uranium.

- **Principle:** Uranium ore emits Gamma radiation. As crushed rocks move along a conveyor belt, they pass under **Scintillation Detectors** (typically Sodium Iodide crystals).
- **Mechanism:** The detector measures the radiation count of each individual rock. If the count exceeds a pre-set threshold (cutoff grade), a pneumatic air-blast system diverts the rock into the "Ore" bin. Rocks with low radiation counts are blasted into the "Waste" bin.
- **Impact:** At Indian plants, this can reject 10-20% of the feed mass as waste while losing very little uranium, effectively increasing the grade of the material entering the mill [14].

3.2 Gravity Concentration

Uranium minerals like Uraninite (UO_2) have a high specific gravity (~9.0), while the silicate gangue (quartz/feldspar) is much lighter (~2.65).

- **Equipment:** Devices such as **Spirals** and **Shaking Tables** are used on the fine ore fractions. The heavy uranium particles settle closer to the deck surface and are separated from the lighter sands.
- **Application:** This is often used to treat low-grade by-product streams or to recover uranium from copper plant tailings (as done at the Mosabani copper recovery circuit) [15].

3.3 Magnetic Separation

Some Indian uranium ores (specifically in the Singhbhum belt) contain **Magnetite (**Fe_3O_4**)** and other iron oxides.

- **Process: Wet High-Intensity Magnetic Separators (WHIMS)** or Drum Separators are used to remove these magnetic fractions.
- **Justification:** Removing magnetite is crucial for the **Acid Leaching** process. Iron oxides consume sulfuric acid and oxidant (MnO_2), increasing operating costs. Furthermore, dissolved iron interferes with the efficiency of the Ion Exchange resin in the purification stage. By removing magnetite physically, the chemical efficiency of the plant is significantly improved [16].

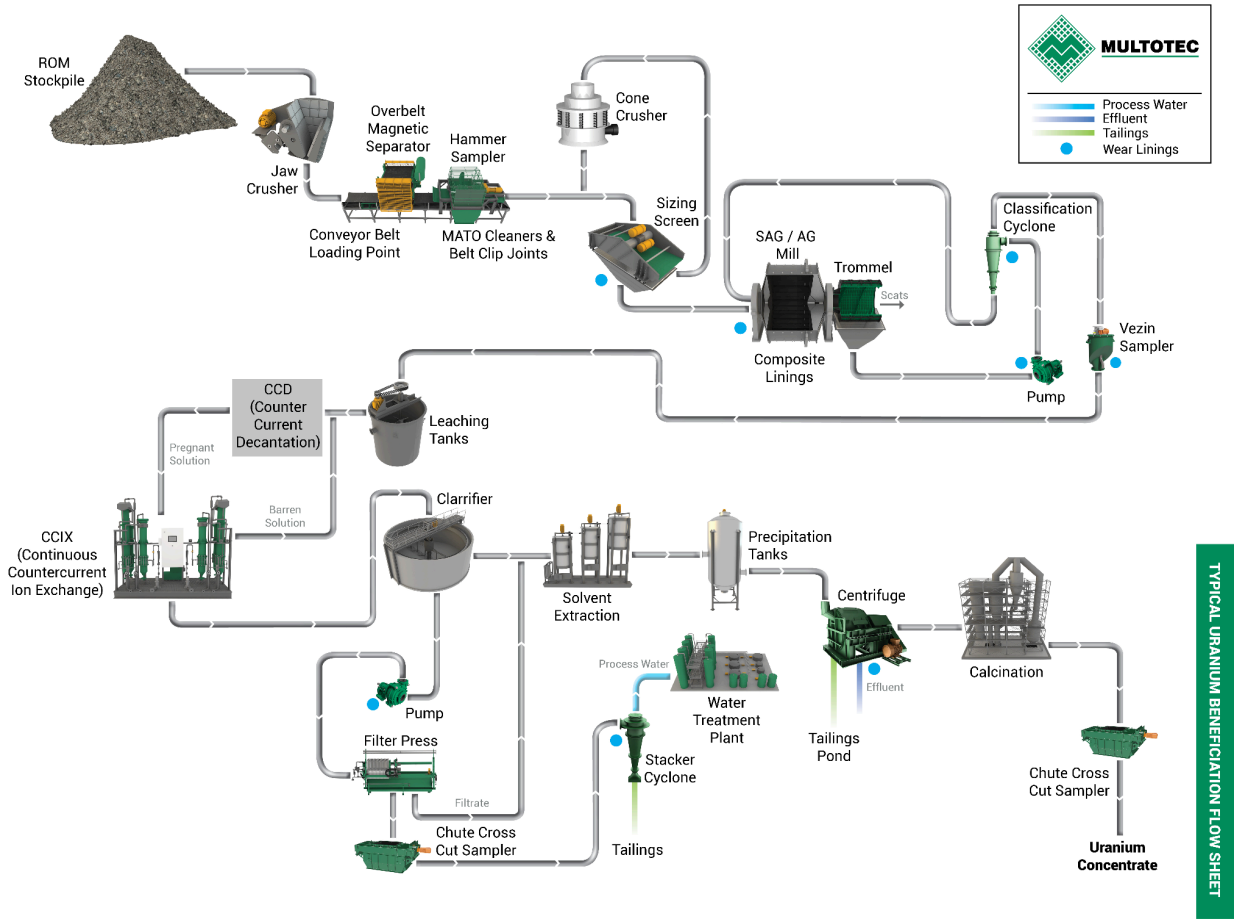

Figure 3.1: Flowsheet of the Beneficiation Circuit. Showing the integration of radiometric sorting and magnetic separation prior to leaching. > [Citation: IAEA TECDOC-359, Advances in Uranium Ore Processing]

4. Hydrometallurgical Extraction I: The Acid Leaching Route (Jharkhand Region)

The **Acid Leaching** process is the backbone of India's uranium production, accounting for the output from the **Jaduguda**, **Bhatin**, **Narwapahar**, and **Turamdih** mines. This metallurgical route is dictated by the presence of **quartz-pebble conglomerates** and **chlorite schists** in the Singhbhum Shear Zone. These host rocks are predominantly siliceous (acid-resistant), meaning they do not consume significant amounts of acid, making this route economically viable [17].

4.1 Leaching Chemistry and Thermodynamics

The core objective is to solubilize uranium from the solid ore matrix into a liquid phase. The lixiviant (leaching agent) of choice is **Sulfuric Acid (H_2SO_4)**.

- **The Oxidation Imperative:** Uranium in primary minerals like **uraninite (UO_2)** and **pitchblende** exists in the tetravalent state (U^{4+}), which is practically insoluble in dilute acid. To achieve dissolution, it *must* be oxidized to the hexavalent uranyl state (U^{6+} or UO_2^{2+}).
- **The Role of Oxidants:** In Indian plants, **Manganese Dioxide (MnO_2)** (sourced as pyrolusite ore) is used as the oxidant. The oxidation reaction is often catalyzed by ferric iron (Fe^{3+}) present in the ore. The reaction mechanism proceeds in two stages:
    1. **Iron Oxidation:** $2Fe^{2+} + MnO_2 + 4H^+ \rightarrow 2Fe^{3+} + Mn^{2+} + 2H_2O$
    2. **Uranium Oxidation:** $UO_2 + 2Fe^{3+} \rightarrow UO_2^{2+} + 2Fe^{2+}$
- Overall Reaction: The net reaction for dissolution is:
  $$UO_2 + MnO_2 + 2H_2SO_4 \rightarrow UO_2SO_4 + MnSO_4 + 2H_2O$$
  This yields the soluble Uranyl Sulfate (UO_2SO_4) complex [18].

4.2 Process Equipment and Parameters

The leaching circuit at the **Jaduguda Mill** is designed for atmospheric leaching.

- **Leach Tanks (Pachucas):** The ground slurry (thickened to ~60% solids) is pumped into tall, cylindrical tanks known as **Pachucas**. These are air-agitated vessels where compressed air is injected at the bottom to keep the solids in suspension and provide oxygen.
- **Reagent Addition:** Concentrated sulfuric acid is added to maintain a free acid concentration of **~5-10 g/L** and a pH of **1.5 to 1.8**. Pyrolusite slurry is dosed to maintain an EMF (Redox Potential) of **-450 to -500 mV**, ensuring oxidizing conditions.
- **Temperature & Kinetics:** The slurry is heated to **50°C – 60°C** using steam injection. This elevated temperature is crucial for accelerating the slow dissolution kinetics of refractory uranium minerals.
- **Residence Time:** The slurry is retained in the leaching circuit for **8 to 12 hours**, achieving a uranium recovery of **90-95%** [19].

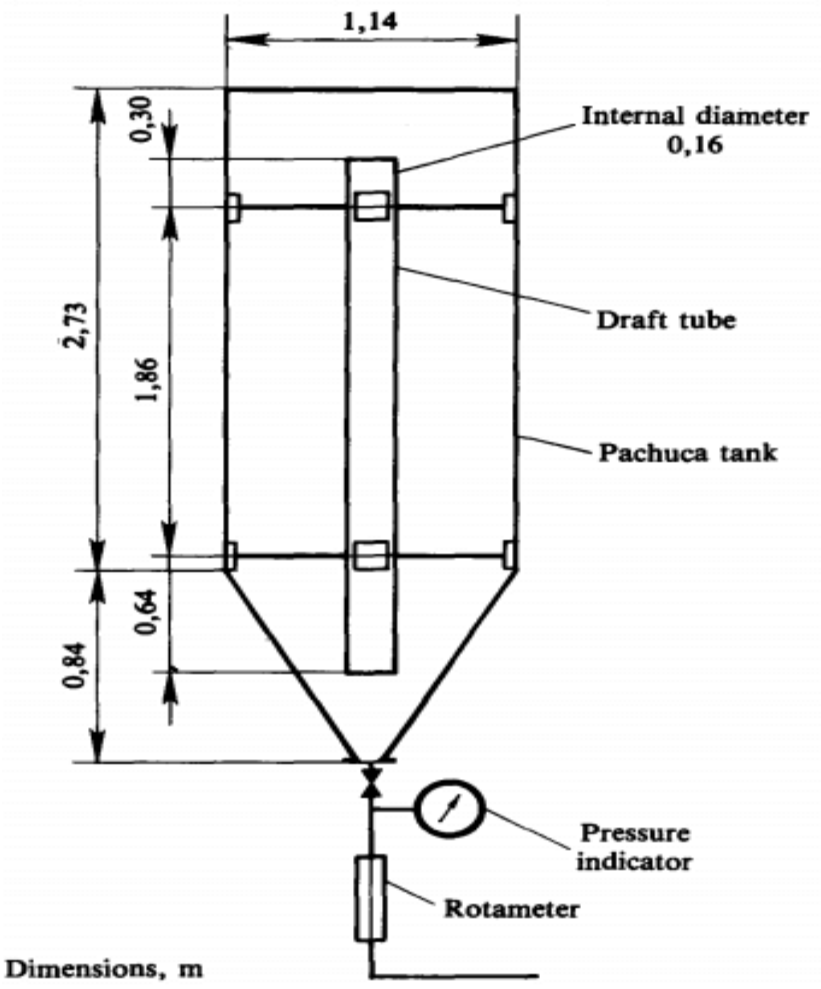

Figure 4.1: Pachuca Leaching Tanks

Caption: Air-agitated Pachuca tanks used for acid leaching at Jaduguda. Compressed air ensures suspension and oxidation. [Figure Citation 4]

4.3 Solid-Liquid Separation

Post-leaching, the slurry consists of the valuable "pregnant leach liquor" (containing dissolved uranium) and the barren solid waste (leach residue).

- **Filtration:** At Jaduguda, two-stage rotary drum vacuum filters are used. The cake is washed with acidified water to recover entrained uranium.
- **Counter-Current Decantation (CCD):** At the newer **Turamdih Mill**, a modern CCD circuit utilizing high-rate thickeners and **Horizontal Belt Filters** is employed. This system offers superior washing efficiency (>99%) and produces a drier filter cake, reducing the volume of liquid effluent sent to the tailings pond [20].

---

5. Hydrometallurgical Extraction II: The Alkaline Pressure Leaching Route (Andhra Pradesh Region)

The discovery of the massive **Tummalapalle** deposit in the Cuddapah Basin necessitated a complete paradigm shift in Indian uranium metallurgy. The host rock here is **Dolostone**, a rock composed of Calcium-Magnesium Carbonate ($CaMg(CO_3)_2$).

- Why Acid Failed: If sulfuric acid were used on this ore, it would react violently with the host rock:
  $$CaCO_3 + H_2SO_4 \rightarrow CaSO_4 + H_2O + CO_2$$
  This would consume massive amounts of acid (making it prohibitively expensive) and generate unmanageable volumes of gypsum sludge and CO_2 gas.
- **The Solution:** An **Alkaline Leaching** process using Sodium Carbonate was developed indigenously by BARC, making it the first plant of its kind in India [21].

5.1 Leaching Chemistry

The lixiviant is a mixture of **Sodium Carbonate (Na_2CO_3)** and **Sodium Bicarbonate ($NaHCO_3$)**. The bicarbonate is essential to prevent the pH from rising too high (>10), which would cause the uranium to precipitate prematurely as sodium diuranate.

- Dissolution Reaction: The uranium is oxidized and complexed by carbonate ions to form the highly stable, soluble Uranyl Tricarbonate complex:
  $$2UO_2 + O_2 + 6Na_2CO_3 + 2NaHCO_3 \rightarrow 2Na_4[UO_2(CO_3)_3] + 2NaOH$$
- **Selectivity:** This process is highly selective for uranium. Unlike acid leaching, it does not dissolve significant amounts of iron, aluminum, or silica, resulting in a cleaner leach liquor [22].

5.2 The Pressure Leaching Circuit (Autoclaves)

Because alkaline leaching kinetics are inherently slower than acid leaching, extreme process conditions are required to achieve economic recovery rates.

- **Autoclaves:** The process takes place in horizontal, multi-compartment **Autoclaves** (pressure vessels).
- **Temperature:** The slurry is heated to **130°C – 140°C**.
- **Pressure:** The vessels are pressurized to **6–8 bar (kg/cm²)**. Industrial oxygen is injected into the autoclave to maintain the necessary oxygen overpressure for oxidation.
- **Heat Recovery:** To minimize energy costs, the hot slurry exiting the autoclave passes through spiral heat exchangers to pre-heat the incoming cold feed slurry [23].

5.3 Filtration Challenges and Solutions

A major technical hurdle at Tummalapalle is the generation of ultra-fine particles ("slimes") during grinding, which makes the alkaline slurry extremely difficult to filter.

- **Solution:** The plant utilizes specialized **Pressure Filters** rather than vacuum filters. These operate at high pressure to force the liquid through the filter cloth, separating the pregnant carbonate liquor from the fine tailings. The use of flocculants is critical here to aid settling [24].

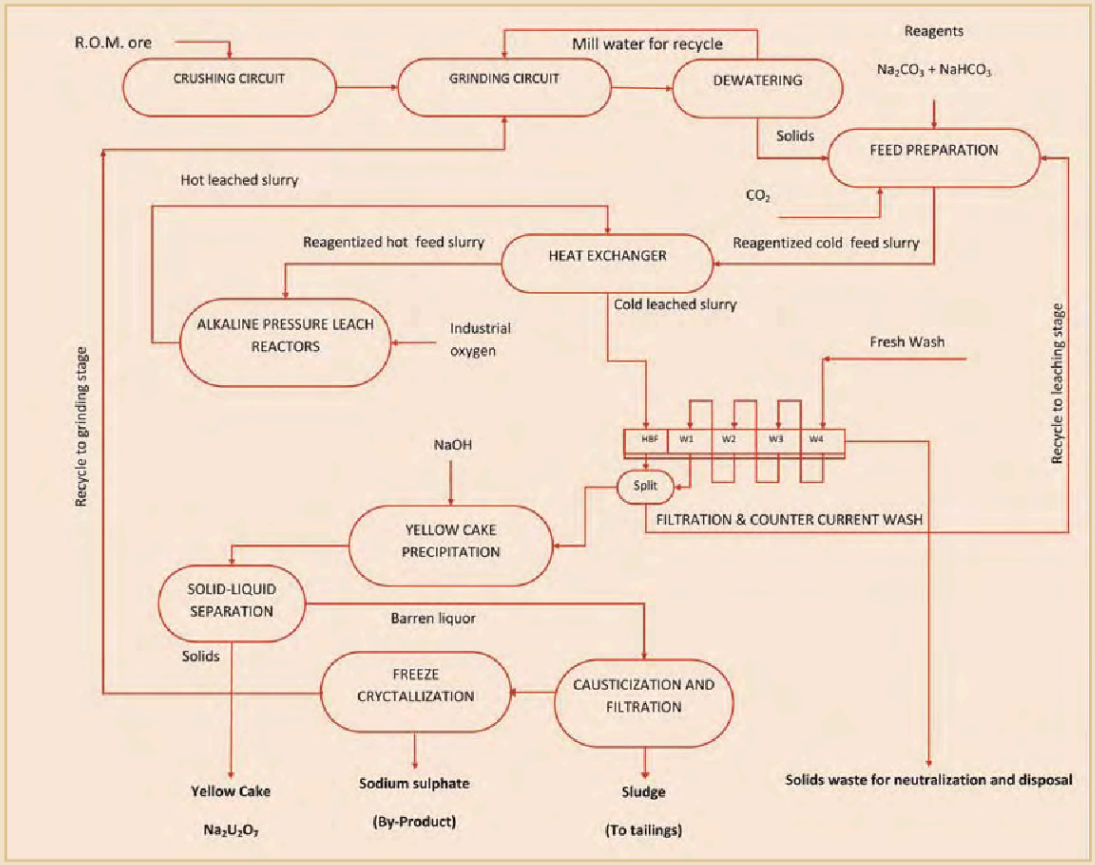

Fig. 4: Process flow sheet for processing Tummalapalle ore

Figure 5.1: Alkaline Pressure Leaching Autoclave

Caption: Schematic of the high-pressure horizontal autoclave used at Tummalapalle for leaching carbonate ores. [Figure Citation 5]

---

6. Purification and Precipitation: Yellowcake Production

Following the leaching stage (Acid or Alkaline), the resulting solution is the **Pregnant Leach Liquor (PLL)**. This liquor is laden with dissolved uranium but also contains a significant load of impurities leached from the host rock, including iron, manganese, silica, rare earth elements (REEs), and trace heavy metals. Before a marketable uranium concentrate can be produced, these impurities must be rigorously removed.

6.1 Purification via Ion Exchange (IX) in Acid Circuits

In the Acid Leaching circuits at **Jaduguda** and **Turamdih**, **Ion Exchange (IX)** is the primary purification method employed. It is preferred over solvent extraction at this stage due to its ability to handle lower-grade leach liquors and its tolerance for trace solids.

- **The Resin Technology:** The clarified PLL is pumped through fixed-bed columns packed with **Strong Base Anion Exchange Resins**. These resins typically consist of a gel-type polystyrene-divinylbenzene matrix functionalized with quaternary ammonium groups.
- **Adsorption Mechanism:** In sulfuric acid solutions, uranium forms anionic sulfate complexes, primarily the **Uranyl Trisulfate ion** $[UO_2(SO_4)_3]^{4-}$.
    - When the PLL passes through the resin bed, the resin sites selectively exchange their mobile chloride (Cl^-) or nitrate (NO_3^-) ions for the bulky uranyl sulfate anions.
    - Crucially, cationic impurities such as Fe^{2+}, Mn^{2+}, Ca^{2+}, and Mg^{2+} are not adsorbed and pass through the column as "Barren Liquor" (waste) [24].
- **Elution (Stripping):** Once the resin capacity is saturated (detected by "breakthrough" of uranium in the effluent), the feed is stopped. The uranium is then stripped (eluted) from the resin using an acidified solution of **Sodium Chloride ($NaCl$)**. The high chloride concentration displaces the uranyl sulfate ions, regenerating the resin and producing a concentrated, purified uranium solution known as the **Eluate** [25].

6.2 Precipitation of Magnesium Diuranate (MDU)

The acidic eluate from the IX columns is now chemically pure enough for precipitation. In Indian uranium mills, the standard intermediate product is **Magnesium Diuranate (MDU)**, commonly referred to as "Yellowcake."

- **Precipitant:** A slurry of **Magnesia (MgO)** is the preferred reagent. It is added to the eluate in agitated reaction tanks.
- The Precipitation Reaction: The addition of magnesia neutralizes the free acid in the eluate, raising the pH to approximately 7.0. At this pH, uranium solubility drops effectively to zero, and it precipitates out of solution:
  $$2UO_2SO_4 + 2MgO + 3H_2O \rightarrow MgU_2O_7 \downarrow + 2MgSO_4 + 3H_2O$$
  The resulting product is a bright yellow, amorphous sludge [26].
- **Post-Precipitation Processing:**
    - **Thickening:** The yellow precipitate is settled in thickeners.
    - **Filtration & Washing:** It is then filtered and washed thoroughly with fresh water to remove entrained chlorides, which are highly corrosive to downstream refining equipment.
    - **Drying:** The washed cake is dried in a spray dryer or multi-hearth roaster to produce a granular powder containing approximately **65-70% Uranium**. This MDU is packed into 200-liter steel drums and dispatched to the Nuclear Fuel Complex [27].

6.3 Sodium Diuranate (SDU) from the Alkaline Circuit

At the **Tummalapalle** plant, the purification strategy differs significantly. Since the leach liquor is already a concentrated alkaline carbonate solution, Ion Exchange is not required for primary purification. Instead, **Direct Precipitation** is employed.

- **Precipitant: Sodium Hydroxide ($NaOH$)** (Caustic Soda) is added to the clarified pregnant carbonate liquor.
- Reaction Mechanism: The addition of caustic soda raises the pH to >12. This high alkalinity destroys the soluble uranyl tricarbonate complex, causing the uranium to precipitate as Sodium Diuranate (SDU):
  $$2Na_4[UO_2(CO_3)_3] + 6NaOH \rightarrow Na_2U_2O_7 \downarrow + 6Na_2CO_3 + 3H_2O$$
- **Handling SDU:** The SDU precipitate is coarser and orange-yellow in color compared to MDU. It is filtered, dried, and drummed.
- **Reagent Regeneration:** A critical economic feature of the Tummalapalle flowsheet is the regeneration of the barren liquor. After SDU removal, the caustic filtrate is treated with CO_2 gas (Carbonation) to convert the sodium hydroxide back into **Sodium Carbonate (Na_2CO_3)**, which is then recycled back to the leaching autoclaves [28].

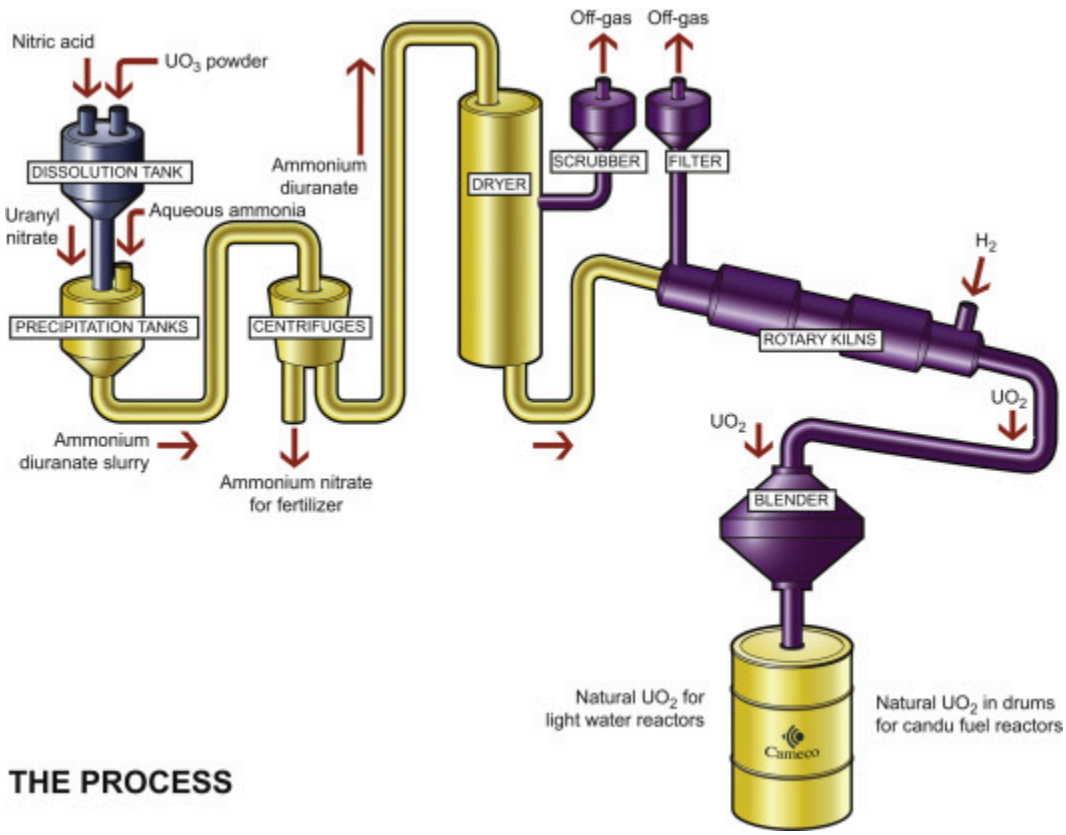

Figure 6.1: Yellowcake Concentrate (MDU)

Caption: Drums of Magnesium Diuranate (MDU) produced at the Jaduguda Mill, sealed and labeled for transport to the refining facility. [Figure Citation 6]

---

7. Refining and Fuel Fabrication: The Nuclear Fuel Complex (NFC)

The "Yellowcake" (MDU/SDU) produced at the mines is chemically impure and unfit for use in a nuclear reactor. It contains trace quantities of neutron absorbers (neutron poisons) such as **Boron, Cadmium, and Rare Earth Elements (Gd, Sm, Eu)**. For a PHWR reactor to function, these impurities must be reduced to **parts-per-million (ppm)** levels. This ultra-purification takes place at the **Nuclear Fuel Complex (NFC)** in Hyderabad.

7.1 Dissolution and Solvent Extraction (The PUREX Process)

The refining process utilizes **Solvent Extraction (SX)**, the global gold standard for nuclear purification due to its exceptional selectivity.

- Dissolution: The yellowcake received from UCIL is dissolved in hot Nitric Acid (HNO_3). This converts the diuranates into a Crude Uranyl Nitrate Solution (CUNS):
  $$MgU_2O_7 + 6HNO_3 \rightarrow 2UO_2(NO_3)_2 + Mg(NO_3)_2 + 3H_2O$$
  The resulting solution contains dissolved uranium along with all the soluble impurities [29].
- **The Extraction Circuit:** The CUNS is fed into a battery of mixer-settlers or pulsed columns. Here, it is contacted counter-currently with an organic solvent composed of **30% Tri-Butyl Phosphate (TBP)** dissolved in odorless kerosene (dodecane).
  - **Mechanism:** TBP acts as a selective ligand. It forms a neutral, organophilic complex with uranyl nitrate ($UO_2(NO_3)_2 \cdot 2TBP$) that transfers into the organic phase.
  - **Rejection of Impurities:** Critically, the impurity metal ions (Fe, B, Cd, Rare Earths) do not form stable complexes with TBP and remain in the aqueous nitric acid phase (the Raffinate), which is discarded as waste [30].
- **Scrubbing:** The uranium-loaded organic solvent is "scrubbed" with a small volume of fresh acid to wash out any physically entrained impurity droplets.
- **Stripping:** Finally, the purified uranium is "stripped" back into a pure aqueous phase using demineralized water at elevated temperature (~60°C). This yields **Pure Uranyl Nitrate Solution (UNPS)**, which is chemically spectrally pure [30].

7.2 Conversion to Oxide: The ADU vs. AUC Route

The purified liquid UNPS must now be converted back into a solid uranium oxide powder suitable for pressing into fuel pellets. NFC employs two distinct precipitation technologies:

Route A: The Ammonium Diuranate (ADU) Process

- Process: Gaseous Ammonia (NH_3) is injected into the UNPS.
  $$2UO_2(NO_3)_2 + 6NH_3 + 3H_2O \rightarrow (NH_4)_2U_2O_7 \downarrow + 4NH_4NO_3$$
- **Product:** This yields **Ammonium Diuranate (ADU)** precipitate.

- **Limitation:** The ADU powder is typically fine and "fluffy," with poor flow characteristics. It usually requires a pre-granulation step (slugging) before it can be pressed into pellets [31].

Route B: The Ammonium Uranyl Carbonate (AUC) Process

- Process: In newer production lines, Ammonium Carbonate is used as the precipitant. $$UO_2(NO_3)_2 + 3(NH_4)_2CO_3 \rightarrow (NH_4)_4[UO_2(CO_3)_3] \downarrow + 2NH_4NO_3$$
- **Product:** This yields **Ammonium Uranyl Carbonate (AUC)** crystals.
- **Advantage:** AUC crystals have a robust, rounded morphology. When decomposed, they produce a "free-flowing" UO_2 powder that can be fed directly into automated pellet presses without pre-granulation. This "Direct Pelletization" route significantly streamlines the fabrication line and reduces dust generation [32].

7.3 Calcination, Reduction, and Sintering

The ADU or AUC precipitate is filtered and fed into a rotary calcination furnace.

1. **Calcination:** Heating to ~500-600°C in air decomposes the precipitate (releasing ammonia and CO_2) to form **Uranium Trioxide (UO_3)**.
2. Reduction: The UO_3 is passed through a reduction furnace at ~700°C under a flowing hydrogen atmosphere (H_2). The hydrogen removes oxygen atoms, converting the powder to Uranium Dioxide (UO_2):
   $$UO_3 + H_2 \rightarrow UO_2 + H_2O$$
   UO_2 is a dark brown/black ceramic powder. It is chemically stable and has a high melting point ($2865^{\circ}C$), making it the ideal nuclear fuel [33].
3. **Pelletization:** The UO_2 powder is pressed into small cylindrical "green pellets" (approx. 15mm diameter) at high pressure (300-400 MPa).
4. **Sintering:** The fragile green pellets are sintered in hydrogen atmosphere furnaces at **1700°C**. Sintering fuses the individual powder particles, shrinking the pellet volume and increasing its density to **10.5 to 10.7 g/cc** (approx. 96-98% of theoretical density). This creates a hard, ceramic pellet capable of retaining fission gases and withstanding intense reactor conditions [34].

7.4 Fuel Bundle Assembly

- **Grinding:** The sintered pellets are center-less ground to achieve precise dimensional tolerances.
- **Loading:** The pellets are stacked and loaded into **Zircaloy-4** cladding tubes (produced at NFC's Zirconium Complex).
- **Welding:** The tubes are filled with helium gas (for heat transfer) and sealed by resistance welding end caps.
- **Assembly:** For India's standard 220 MWe PHWRs, 19 such fuel pins are assembled into a **19-element fuel bundle**. For the larger 540 MWe and 700 MWe reactors, **37-element fuel bundles** are fabricated [34].

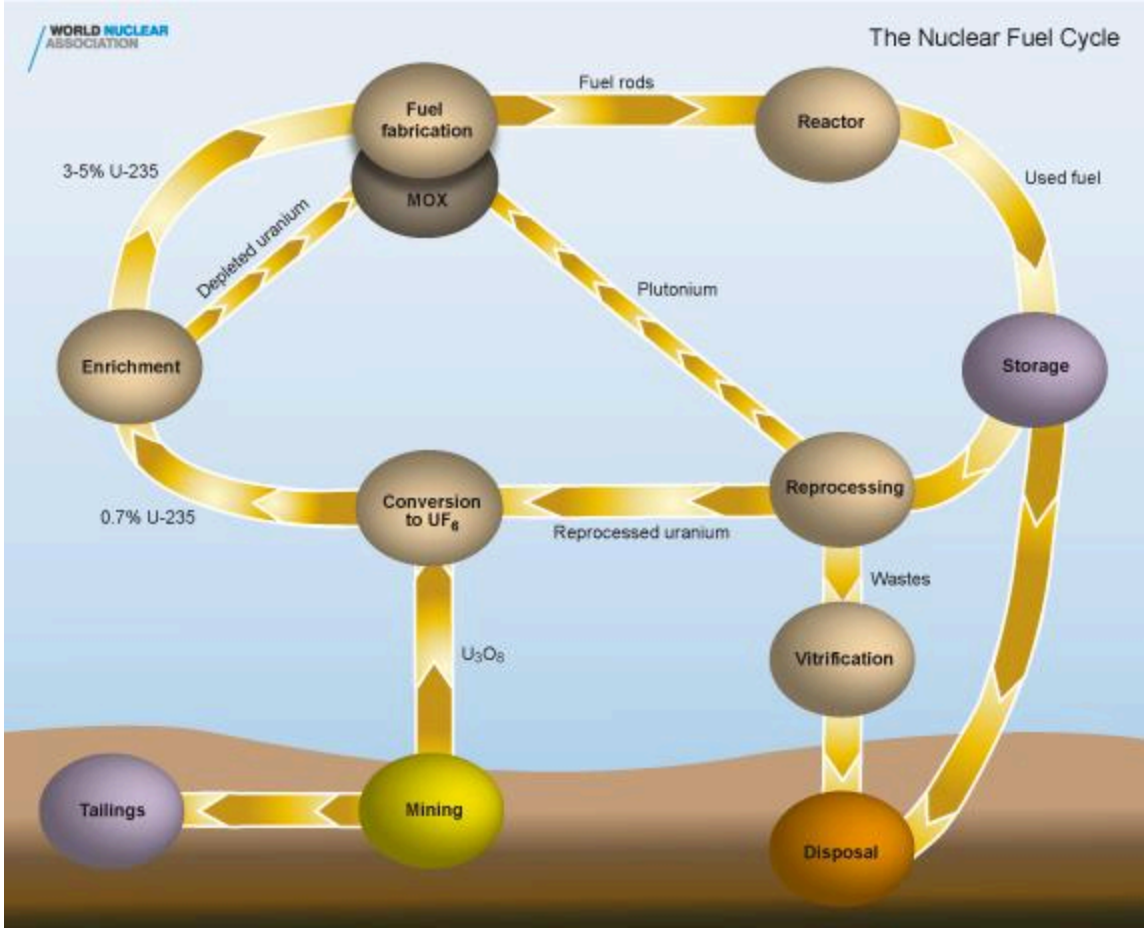

Figure 7.1: Nuclear Fuel Fabrication Flowsheet (NFC)

Caption: A schematic of the refining operations at NFC Hyderabad, detailing the conversion of yellowcake to sintered UO2 fuel pellets. [Figure Citation 7]

---

8. Justification for Process Selection: A Technical & Economic Imperative

The selection of uranium extraction technology in India is not a matter of arbitrary choice or historical precedent; it is a direct engineering response to the **mineralogical** and **geochemical constraints** imposed by the domestic ore bodies. A comparative analysis of the two primary routes—Acid vs. Alkaline—highlights why specific methods are mandated for specific regions to ensure economic viability.

8.1 Acid Leaching (Jharkhand Region)

The mines in the **Singhbhum Shear Zone** (Jaduguda, Bhatin, Narwapahar, Turamdih) operate exclusively on the Acid Leaching flowsheet.

- **Host Rock Mineralogy:** The ore is hosted in **Quartz-Pebble Conglomerate (QPC)** and **Chlorite Schist**. The primary gangue minerals are Quartz (SiO_2), Feldspar, Chlorite, and Biotite [41].
- **Chemical Behavior:** Silicate minerals are largely chemically inert to dilute sulfuric acid at the process conditions ($50-60^{\circ}C$, pH 1.5). When acid is added to the ore slurry, it attacks the uranium minerals (uraninite/pitchblende) and acid-soluble impurities (like iron oxides and apatite) but leaves the bulk silicate matrix untouched.
- **Technical Justification:**
    - **Reagent Efficiency:** Because the host rock does not consume the lixiviant, the specific acid consumption is kept within economic limits (typically **25-35 kg/tonne** of ore).
    - **Kinetics:** Acid leaching offers rapid reaction kinetics. Dissolution is typically complete within **8-12 hours**, allowing for high throughput in smaller tank volumes compared to alkaline leaching.
    - **Recovery:** Acid leaching consistently yields high uranium recoveries (**>90%**) for these silicate-hosted ores [42].

8.2 Alkaline Pressure Leaching (Andhra Pradesh Region)

The massive **Tummalapalle** deposit in the Cuddapah Basin required a complete departure from the established acid route.

- **Host Rock Mineralogy:** The ore is hosted in **Phosphatic Siliceous Dolostone**. The matrix is composed of **Calcite** ($CaCO_3$) and **Dolomite** ($CaMg(CO_3)_2$), which make up >70% of the rock mass [43].
- Chemical Constraint (The "Acid Kill"): If sulfuric acid were applied to this ore, it would trigger a violent neutralization reaction:
  $$CaCO_3 + H_2SO_4 \rightarrow CaSO_4 + H_2O + CO_2 \uparrow$$
  This would have two catastrophic consequences:
    - **Reagent Consumption:** The acid consumption would skyrocket to **>500 kg/tonne**, making the process economically impossible (more expensive than the value of the uranium recovered).
    - **Physical Handling:** The reaction produces massive volumes of Gypsum ($CaSO_4$) sludge and carbon dioxide gas, clogging the equipment.
- **Technical Justification:** Alkaline leaching is the *only* technically viable option. The Sodium Carbonate/Bicarbonate lixiviant is selective for uranium. It does not dissolve the carbonate host rock.
    - Although this route requires high temperature ($130-140^{\circ}C$) and high pressure (8 bar) to achieve acceptable kinetics (making it energy-intensive), it avoids the massive reagent loss associated with acid leaching. The barren carbonate liquor can also be regenerated and recycled, a closed-loop efficiency impossible with acid [44].

Feature	Acid Leaching (Jaduguda)	Alkaline Leaching (Tummalapalle)
Dominant Host Rock	Quartz, Chlorite (Silicates)	Dolomite, Calcite (Carbonates)
Gangue Reactivity	Inert to Acid	Reacts violently with Acid
Lixiviant System	$H_2SO_4 + MnO_2$	$Na_2CO_3 + NaHCO_3 + O_2$
Process Conditions	Atmospheric, $50-60^{\circ}C$	Pressurized (8 bar), $130-140^{\circ}C$
Leaching Time	8 – 12 Hours	~6 Hours (under pressure)
Reagent Consumption	Moderate (Acid consumed by Fe/P)	Low (Carbonate recycled)

---

9. Alternate Processes: Status and Feasibility in India

While conventional mining and milling dominate the Indian landscape, alternative extraction technologies are continuously evaluated for specific deposits to improve economics or exploit marginal resources.

9.1 In-Situ Recovery (ISR)

Globally, **In-Situ Recovery (ISR)** (or In-Situ Leaching, ISL) has become the dominant uranium production method (accounting for >50% of world supply, e.g., Kazakhstan, USA) due to its low cost and minimal surface footprint. It involves injecting lixiviant directly into the underground aquifer to dissolve uranium in place and pumping the pregnant solution to the surface.

- **Feasibility in India:** ISR requires a specific geological setting: a **permeable sandstone aquifer** confined by impermeable clay layers to control fluid flow.
    - **Limitation:** Most of India's currently operating mines (Jaduguda, Turamdih) are in hard, impermeable **metamorphic rock** (schist/conglomerate). The rock has zero permeability, making ISR physically impossible.

- **Future Potential:** The **Domiasiat (Kylleng-Pyndengsohiong)** deposit in the West Khasi Hills of **Meghalaya** is hosted in permeable Cretaceous sandstones. The Atomic Minerals Directorate (AMD) and UCIL have conducted successful pilot studies for ISR technology in this region. If fully developed, this would be India's first ISR mine, drastically reducing extraction costs [45].

9.2 Heap Leaching

Heap leaching involves stacking crushed low-grade ore on lined pads and irrigating it with acid over a period of months.

- **Feasibility:** This method has lower recovery rates (60-70%) compared to agitated leaching but requires very low capital investment (no fine grinding or complex plant required).
- **Application:** UCIL has successfully utilized heap leaching technology at **Jaduguda** to treat very low-grade mine rejects (grading <0.03% U_3O_8) that fall below the economic cutoff for the main mill. This "scavenging" operation recovers uranium that would otherwise be lost to waste dumps, maximizing overall resource utilization [46].

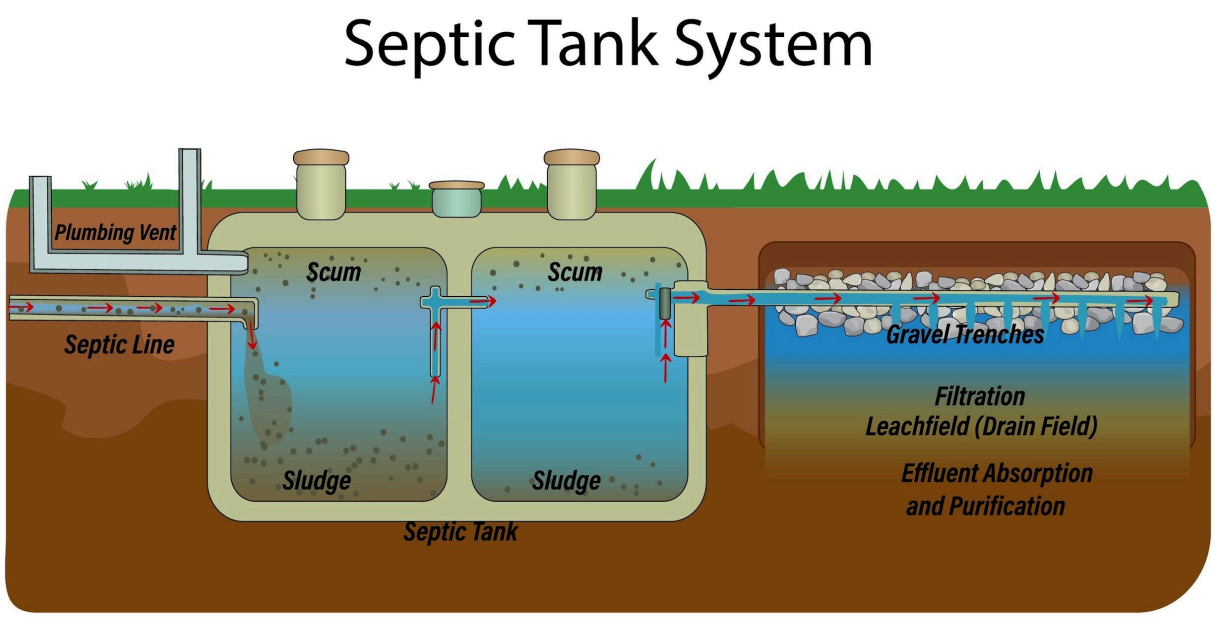

Shutterstock

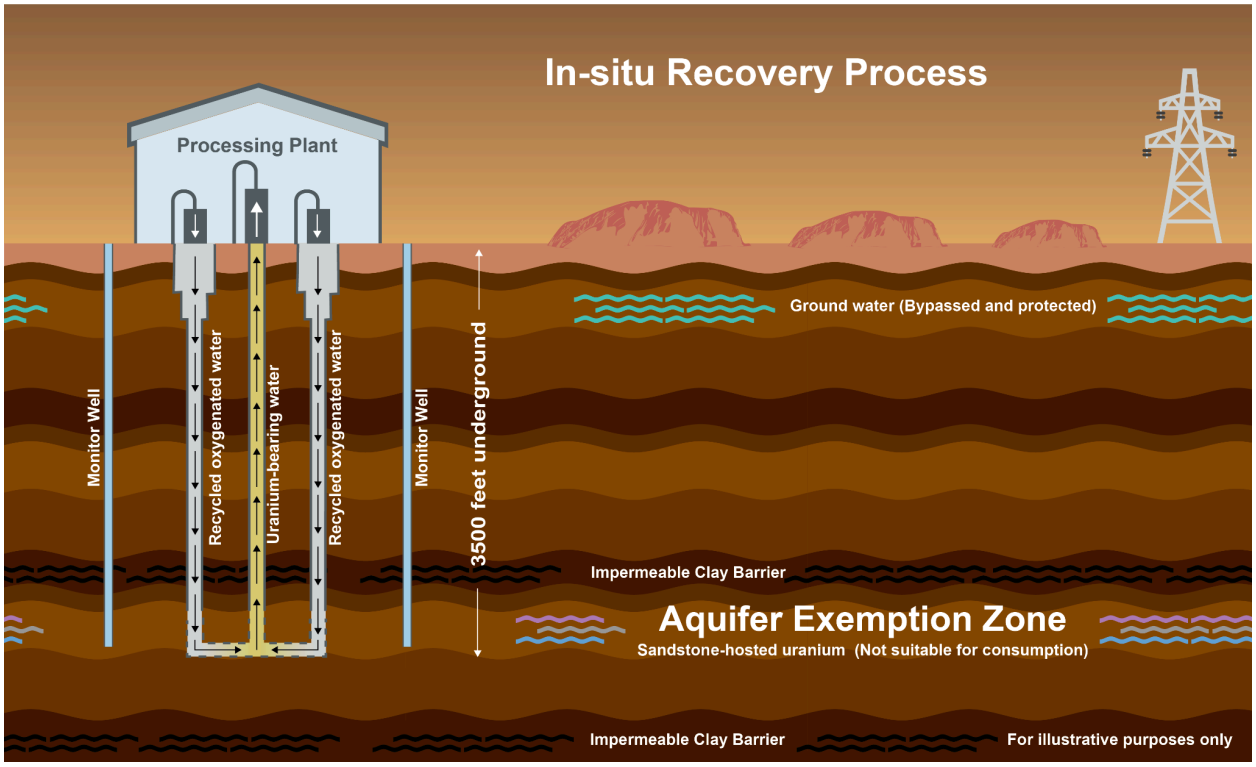

Figure 9.1: In-Situ Recovery (ISR) Schematic

Caption: A conceptual diagram of the ISR process, illustrating injection and recovery wells in a sandstone aquifer. This technology is being piloted for the sandstone-hosted deposits in Meghalaya. [Figure Citation 8]

---

10. Recovery of By-Products: The "Zero Waste" Philosophy

Given the very low grade of Indian uranium ores, the recovery of associated minerals is not just an environmental measure but a vital economic necessity. The ores of the Singhbhum Shear Zone are polymetallic, containing trace sulfides and oxides that can be monetized.

10.1 The By-Product Recovery Plant (BRP)

At the Jaduguda mill complex, a dedicated **By-Product Recovery Plant (BRP)** operates downstream of the uranium mill to extract value from what would otherwise be waste tailings.

1. **Molybdenum:** Recovered as **Molybdenite (MoS_2)** concentrate via froth flotation. Molybdenum is a critical strategic metal used in high-strength steel alloys and lubricants. India has very few primary molybdenum sources, making this recovery strategic.
2. **Copper:** Recovered as **Chalcopyrite ($CuFeS_2$)** concentrate. This concentrate is sent to copper smelters (e.g., Hindustan Copper Ltd) for metal production.
3. **Nickel:** Recovered as a Nickel Sulfide concentrate. Like molybdenum, nickel is an essential alloying element for stainless steel and superalloys.

4. **Magnetite:** Recovered from the mill tailings using **Wet High-Intensity Magnetic Separators (WHIMS)**.
    - *Process Benefit:* The removal of magnetite (Fe_3O_4) serves a dual purpose. First, it generates a saleable by-product used in coal washeries (as heavy media). Second, removing iron from the tailings before discharge reduces the potential for acid generation in the tailings pond [47].

This integrated approach ensures that valuable strategic metals are not lost to the tailings pond, improving the sustainability and overall revenue of the mining operation.

References

[1] Department of Atomic Energy (DAE), Government of India. *Annual Report 2023–24: Nuclear Power Programme*.

[2] Uranium Corporation of India Ltd. (UCIL). “Operations: Mining and Processing.” UCIL Official Website. Available at: https://ucil.gov.in/

[3] Nuclear Fuel Complex (NFC). “Production Activities: Ore to Core.” NFC Official Website. Available at: https://www.nfc.gov.in/

[4] Bhabha Atomic Research Centre (BARC). *Uranium Mining and Processing in India*, Technical Report, p. 49.

[5] Gupta, C.K. *Chemical Metallurgy: Principles and Practice*. Wiley-VCH, 2003, p. 345.

[6] Sahoo, S.K., et al. “Uranium extraction process at Jaduguda.” ResearchGate, Publication 51426781.

[7] Suri, A.K. “Process development studies for low-grade uranium deposit in alkaline host rocks of Tummalapalle.” BARC / ResearchGate, 2010.

[8] UCIL. *Jaduguda Mine Profile*. UCIL Operations Brochure.

[9] Wills, B.A. *Mineral Processing Technology*. 7th Edition, Butterworth-Heinemann.

[10] World Nuclear Association. “Occupational Safety in Uranium Mining: Radon Control.” WNA Library.

[11] International Atomic Energy Agency (IAEA). *Uranium Extraction Technology*, Technical Reports Series No. 359, Vienna, 1993.

[12] Sahoo, S.K., et al. “Radiological Physics in Uranium Mines.” *Radiation Protection Dosimetry*, Vol. 156.

[13] Biswas, Sujoy, et al. “Recovery of Uranium from Alkaline Ore Leach Solution.” *Sustainable Chemical Engineering*, 2020.

[14] IAEA. “Radiometric Sorting of Uranium Ores.” IAEA-TECDOC-359.

[15] BARC. “Recovery of uranium from copper tailings.” *Mineral Processing in Indian Nuclear Programme*.

[16] Rao, G.V. “Enhancement of Cu, Ni & Mo recoveries in Jaduguda ore.” Semantic Scholar / RRL Bhubaneswar.

[17] Sahoo, S.K. et al. "Uranium extraction process at Jaduguda." ResearchGate, 2024.

[18] TSI Journals. "Sulphuric acid leaching of uranium ore using MnO2." Chemical Technology, Vol 12.

[19] International Atomic Energy Agency (IAEA). "Processing of Low-Grade Uranium Ores." IAEA Panel Proceedings, Vienna.

[20] Uranium Corporation of India Ltd (UCIL). "Technical developments in uranium mining and milling in India." INIS-IAEA Repository, Ref 4.2.

[21] Suri, A.K. "Process development studies for low-grade uranium deposit in alkaline host rocks of Tummalapalle." BARC/ResearchGate, 2010.

[22] Biswas, Sujoy et al. "Recovery of Uranium from Alkaline Ore Leach Solution." Sustainable Chemical Engineering, Eq 2.

[23] UCIL. "Tummalapalle Mill: Technical modification of alkali leaching circuit." ResearchGate Publication 374562984.

[24] International Atomic Energy Agency (IAEA). "Uranium Extraction Technology." Technical Reports Series No. 359, Vienna, 1993.

[25] Gupta, C.K. and Singh, H. Uranium Resource Processing. Springer Science & Business Media, 2013, p. 155.

[26] Uranium Corporation of India Ltd (UCIL). "Processing Technology: Magnesium Diuranate Precipitation." UCIL Operations Manual.

[27] Sahoo, S.K. et al. "Uranium extraction process at Jaduguda." ResearchGate, 2024.

[28] Biswas, Sujoy et al. "Recovery of Uranium from Alkaline Ore Leach Solution Using a Precipitating Method." Scientific Space/WiserPub.

[29] Nuclear Fuel Complex (NFC). "Solvent Extraction Purification Process." NFC Technical Brochure.

[30] IAEA. "Advances in Uranium Refining and Conversion." IAEA-TECDOC-420, p. 21.

[31] Gupta, U.C. et al. "UO2 Production via AUC Route at NFC." INIS-IAEA Repository, Record 5rxsy-psb24.

[32] Ganguly, C. "Advanced Fuel Cycles for PHWRs." Journal of Nuclear Materials.

[33] Britannica. "Uranium Processing: Conversion to Oxide." Encyclopaedia Britannica Technology.

[34] NFC. "Fuel Fabrication for PHWRs: Pelletization and Assembly." NFC Process Description.

[41] Sahoo, S.K. et al. "Mineralogical characterization of Jaduguda Uranium Ore." Journal of Radioanalytical and Nuclear Chemistry.

[42] IAEA. "Processing of Low-Grade Uranium Ores." IAEA Panel Proceedings, Vienna, p. 146.

[43] Suri, A.K. "Process development studies for low-grade uranium deposit in alkaline host rocks of Tummalapalle." BARC/ResearchGate, 2010.

[44] Biswas, Sujoy et al. "Recovery of Uranium from Alkaline Ore Leach Solution." Sustainable Chemical Engineering, Eq 2.

[45] World Nuclear Association. "Uranium Mining Overview: In-Situ Leach." WNA Library.

[46] UCIL. "Heap Leaching Experiments at Jajawal." INIS-IAEA Repository, Ref 5.3.

[47] BARC. "Recovery of sulphide minerals from Jaduguda uranium ore." Mineral Processing in Indian Nuclear Programme, p. 403.

[48] Rao, G.V. "Enhancement of Cu, Ni & Mo recoveries in Jaduguda ore." Semantic Scholar/RRL Bhubaneswar.